AN EIGHT - CHANNEL RADIO TELEMETRY SYSTEM
TO
MONITOR ALLIGATOR BODY TEMPERATURES
IN
A HEATED RESERVOIR

BY

Edward A. Standora
Savannah River Ecology Laboratory
P. O. Drawer E
Aiken, South Carolina 29801

There is considerable interest today in the response of ectotherms to thermal loading and how it affects their ability to thermoregulate. With large ectotherms such as the American alligator, the interest is especially keen as researchers feel that crocodilians as descendants of the dinosaurs may shed light on some questions pertaining to the behavior and physiology involved in the thermoregulation of these extinct giant reptiles. Two schools of thought exist in this area: one presents evidence in both the scientific literature (Bakker, 1972) and popular books (Desmond, 1976) suggesting that dinosaurs were endotherms; the other presents convincing arguments as to why endothermy was not required to explain the dinosaurs presumed behavior (Spotila et al., 1973). Studies of the thermoregulatory responses of large ectotherms to thermal gradients created in aquatic habitats by the release of heated effluents from electric power plants provide a unique opportunity not only to better understand the energetic relationships of such organisms, but also to better evaluate the potential for environmental harm of such releases as ever increasing numbers of power plants are constructed in an effort to meet national energy demands (Gibbons and Sharitz, 1974; Esch and McFarlane, 1976).

The telemetry system to be described in this paper was designed to help answer biological questions which have immediate application to thermally impacted systems and particularly to contribute more information to the basic understanding of thermoregulation in large reptiles both living and extinct.

Alligators living in unaltered environments are known to regulate their body temperature by shuttling between terrestrial basking sites and the water. In thermally altered environments where water temperature gradients are available however, it may no longer be necessary for such animals to display basking behavior when a lateral movement in the thermal gradient could equally well result in maintaining a preferred body temperature. Seeking water at the appropriate temperature would thus reduce the need for expending the effort involved in leaving the water to bask.

To conduct a detailed analysis of the thermoregulatory behavior and thermal ecology of alligators inhabiting a thermally altered reservoir it was necessary to develop a telemetry system which would allow close monitoring of the changes in temperature at various places along the alligator's body (Fig. 1) as it moved through thermal gradients. With this approach it was possible to study the occurrence of head-trunk temperature differences and to quantify differential heating rates. This technique made it possible to evaluate the effectiveness of behavioral thermoregulation through changes in posture and floating position.

Other researchers have used telemetry to study alligator temperatures (Spotila, 1974; Smith, 1975; Lang, 1975), but a complete temperature profile along different parts of an animal's body in conjunction with the simultaneous collection of microclimate data had never been conducted on free-ranging animals exposed to high thermal loading.

The multichannel telemetry system described here was designed to study the thermoregulatory behavior of adult American alligators inhabiting an 1120 ha nuclear reactor cooling reservoir located on the U. S. ERDA's Savannah River Plant near Aiken, South Carolina.

The approximately 125 alligators inhabiting this reservoir are exposed to an unusually wide range of temperature extremes throughout the year due to seasonal temperature changes in conjunction with variations in reactor scheduling and thermal output. During the summer, at times when the reactors are operating, water temperatures in portions of the reservoir at the point of input are elevated above the lethal thermal maximum for alligators. Murphy and Brisbin (1974), have shown that alligators tend to congregate in the heated portion of this reservoir and remain active during the winter, while their counterparts in colder areas of the reservoir system go into a semidormant state. In some cases the animals have succumbed, apparently to low temperature stress during extremely cold winters.

To quantify the flow of heat between the alligators and their environment, the amount of thermal energy available from different sources in the environment must first be determined. To accomplish this a remote environmental monitoring station (REMS) was constructed which contains sensors to measure long and short wave radiation, air temperature, substrate temperature, wind speed and direction and relative humidity. The REMS is mounted in a 12-foot, pontoon-stabilized, flat-bottom aluminum boat with all the electronics mounted in weather-proof plexiglas enclosures beneath a protective shelter. In this configuration the entire station can be easily towed to a location near the animal being monitored, enabling constant recording of the microclimatic parameters through automated printouts at half-hour intervals. This approach makes it possible to calculate realistic thermal budgets for an animal by precisely determining important microclimatic variations. Through the integration of the physical laws of thermodynamics and the information relating to the animal's physiology and behavior, mathematical models using a climate space approach (Spotila, et al., 1972) have been proposed which predict the varying range of environmental conditions under which an alligator can survive on both a short and long-term basis. Such an approach is a powerful research tool because of its quantitative and predictive nature and lends itself readily to data of the kind which can be collected by the equipment described here.

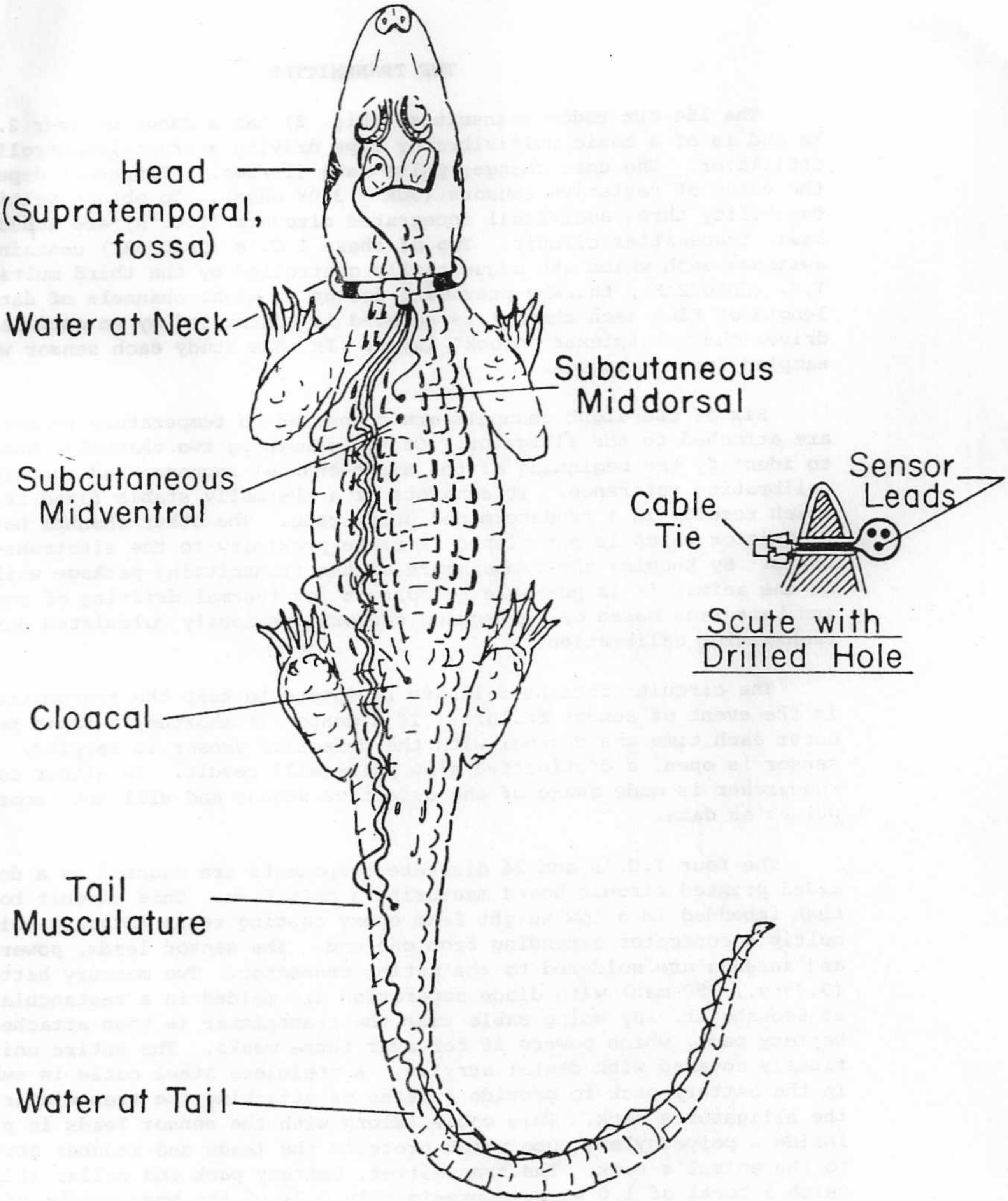

Fig. 1. Diagrammatic representation of an instrumented alligator with a multichannel transmitting collar, showing placements of temperature sensors. Dorsal scutes with drilled holes proved an effective means of positioning sensor leads.

THE TRANSMITTER

The 164 MHz radio transmitter (Fig. 2) has a range of over 2.5 km and is of a basic multivibrator type driving a crystal-controlled oscillator. The unit changes pulse rate (10/sec. - 0.5/sec.) dependent on the value of resistive sensors (50K - 300K ohms). To obtain multichannel capability three additional integrated circuits (I.C.'s) are added to the basic transmitter circuit. Two of these I.C.'s (CD4016BF) contain four switches each which are sequentially controlled by the third multiplexing I.C. (CD4022AF), thereby providing for up to eight channels of data. The length of time each channel is sampled is controlled by an oscillator which drives the multiplexer "clock" input. In this study each sensor was sampled for 15 seconds.

Six of the eight channels are connected to temperature sensors which are attached to the alligator. Of the remaining two channels, one is used to identify the beginning of the eight-channel sequence and functions as a calibration reference. It consists of a thermally stable fixed resistor which results in a predetermined pulse rate. The other channel has a thermistor which is positioned in close proximity to the electronic components. By knowing the temperature of the transmitting package while it is on the animal it is possible to correct for thermal drifting of components and batteries based on correction factors previously calculated during transmitter calibration.

The circuit contains failsafe resistors to keep the transmitter pulsing in the event of sensor failure. If a sensor is shorted, a rapid pulse will occur each time the channel with the defective sensor is sampled. If the sensor is open, a distinctive slow pulse will result. In either case the researcher is made aware of the defective sensor and will not record the pulses as data.

The four I.C.'s and 24 discrete components are mounted on a double-sided printed circuit board measuring 3 cm x 6 cm. This circuit board is then imbedded in a low weight foam epoxy casting resin (Stycast) with a multipin connector extending from one end. The sensor leads, power leads and antenna are soldered to the mating connector. Two mercury batteries (9.45 v., 250 mah) with diode separation are molded in a rectangular block of Scotchcast. By using cable ties the transmitter is then attached to the battery pack, which powers it for over three weeks. The entire unit is finally covered with dental acrylic. A stainless steel cable is embedded in the battery pack to provide a means of attaching the transmitter around the alligator's neck. This cable, along with the sensor leads is placed inside a polyethylene tube which protects the leads and reduces abrasion to the animal's neck. The transmitter, battery pack and collar (Fig. 3) weigh a total of 1.0 kg or approximately 0.7% of the body weight of the average 3.3 m adult animal.

THE SENSORS

The temperature sensors consist of 1.3 cm long glass probe thermistors attached to 2.5 mm diameter coaxial cable. The head, dorsal, ventral and tail sensors are all similar in that the thermistors are soldered to the

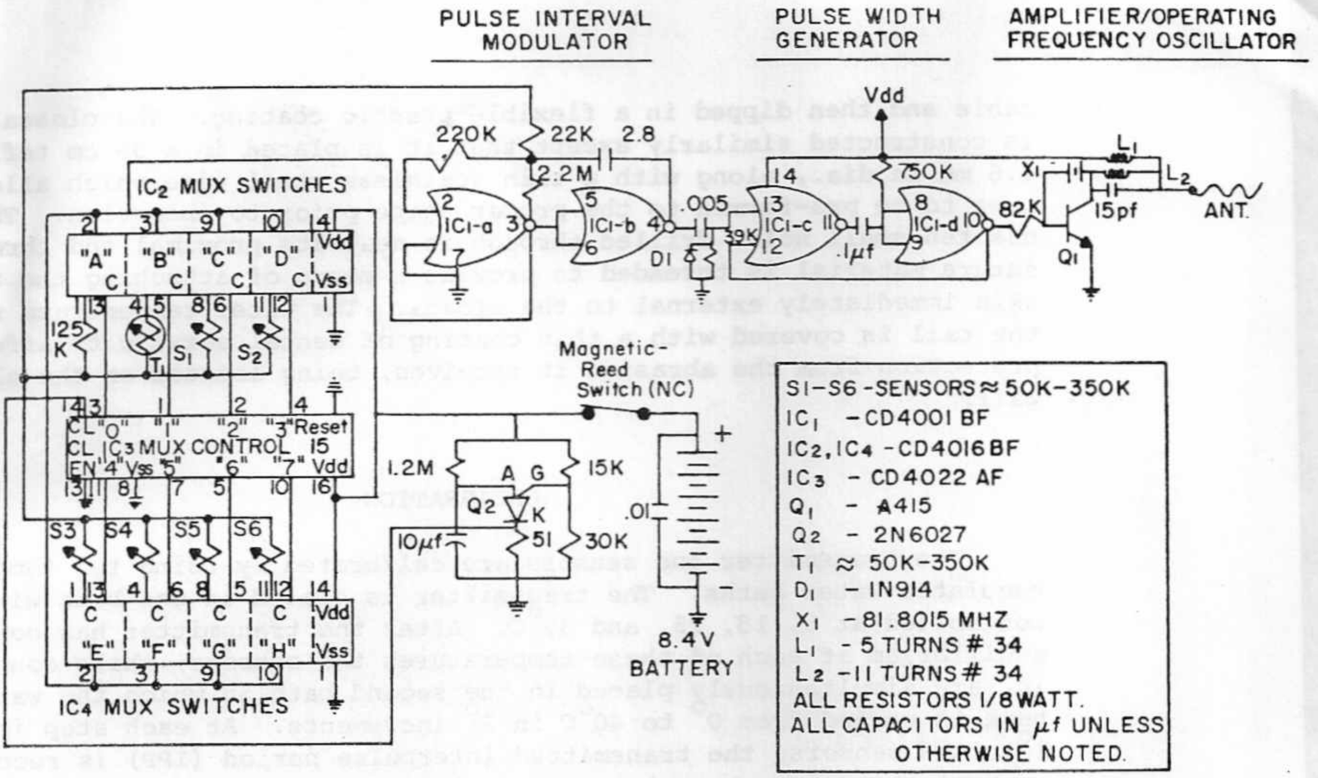

Fig. 2. Schematic for 8-channel, 164 MHz radio transmitter which varies pulse rate with temperature. The use of C/MOS integrated circuits affords complexity with minimum power and space requirements.

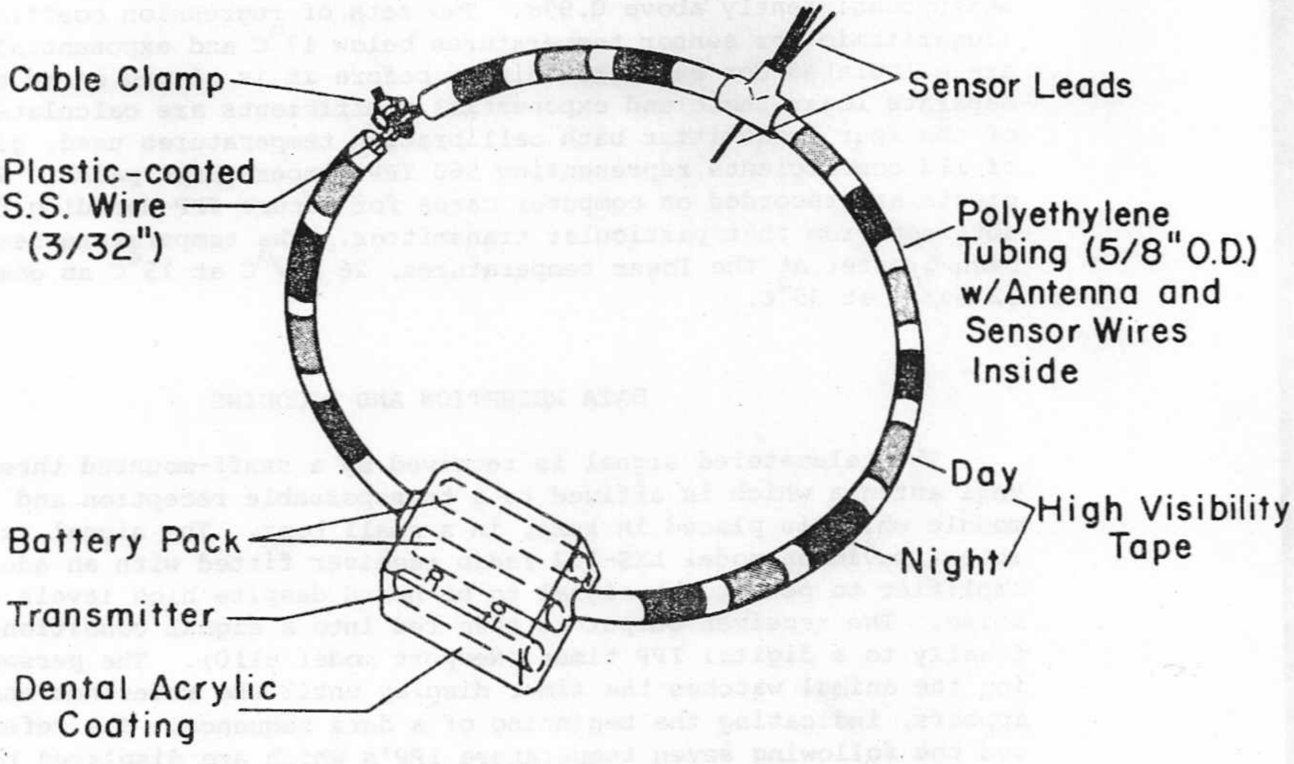

Fig. 3. Radio transmitter and collar as prepared for attachment to alligator. This configuration permits easy size adjustment and is durable enough to withstand any abuse the alligator can deliver.

cable and then dipped in a flexible plastic coating. The cloacal sensor is constructed similarly except that it is placed in a 35 cm teflon tube, 4.6 mm in dia., along with a thin stainless steel wire which allows the tube to be pre-formed to the proper shape prior to insertion. The tubing has ten small holed drilled through it near its proximal end through which suture material is threaded to provide a means of attaching the tube to the skin immediately external to the cloaca. The water temperature sensor at the tail is covered with a thin coating of dental acrylic to afford it some protection from the abrasion it receives, being located on the alligator's tail.

CALIBRATION

The transmitter and sensors are calibrated by using two temperature regulated water baths. The transmitter is placed in one bath with the water controlled at 5, 15, 25, and 35°C. After the transmitter has come to equilibrium at each of these temperatures the sensors, while connected to it, are simultaneously placed in the second bath in which the water temperature is varied from 0° to 40°C in 2° increments. At each step increment of 2° to the sensors, the transmitted interpulse period (IPP) is recorded for each of the seven channel-sensor pairs. The transmitter pulses faster at higher temperatures i.e. gives shorter IPP's. The relationship between IPP and temperature is described by the equation: $y = a + b (\ln x)$ where x = IPP in ms and y = temperature in °C; r^2 values have never been less than 0.998. For IPP's shorter than 800 ms (i.e. temperatures above about 17°C), an exponential fit $y = ae^{bx}$ is found to be more appropriate, with r^2 values again consistently above 0.998. Two sets of regression coefficients (logarithmic for sensor temperatures below 17°C and exponential for above) are calculated for each transmitter before it is placed on an animal. Separate logarithmic and exponential coefficients are calculated at each of the four transmitter bath callibration temperatures used, giving a total of 112 coefficients representing 560 IPP-temperatures pairs. The coefficients are recorded on computer cards for future IPP decoding for any data obtained from that particular transmitter. The temperature resolution has been greater at the lower temperatures, 26 ms/°C at 15°C as compared to 12 ms/°C at 35°C.

DATA RECEPTION AND DECODING

The telemetered signal is received by a staff-mounted three-element yagi antenna which is affixed to a transportable reception and data display module which is placed in turn, in a small boat. The signal is then passed into a Davidson model LXS-102 radio receiver fitted with an additional audio amplifier to permit the signal to be heard despite high levels of ambient noise. The receiver output is then fed into a signal conditioner and finally to a digital IPP timer (Newport model 6110). The person monitoring the animal watches the timer display until the reference channel appears, indicating the beginning of a data sequence. The reference IPP and the following seven temperature IPP's which are displayed to 0.1 ms have showed some fluctuation and are therefore rounded to the nearest ms and recorded during the two minute (8 displays x 15 sec) duration of the data sequence.

Data are analyzed with a computer program which compares the submitted reference channel IPP's with the calibration reference IPP's and corrects the recorded sensor IPP's for component or temperature drifting. It then selects the proper coefficients based on transmitter temperature and converts IPP's to a temperature print-out.

PROCEDURE

Alligator's are captured with set snares (Murphy and Fendley, 1975) which are positioned during the afternoon and checked between 22:00 and 24:00 that night. When an animal is found in a snare it is pulled to shore and a wet cloth placed over its eyes which helps to calm it. Another snout snare is then placed around its jaws to keep them shut. Heavy gauge 1.3 cm wide rubber bands are then secured over the snout to keep the mouth closed. The capture and snout snares are then removed. The alligator is lifted onto a ladder which has restraining web fabric belts attached to its sides at one-foot intervals. By fastening the belts over the alligator it can be safely weighed and then transported to the site where the transmitter collar is to be fitted and the sensors attached. The attachment procedure requires six to eight hours with three people working and begins by anesthetizing the alligator with an intramuscular injection of ketamine hydrochloride (60 mg/Kg body weight) in each limb and the tail. The collar is fitted to the animal by adjusting the stainless steel cable and tubing being certain that the final size will be large enough for the animal to easily feed but not so large that it can slip forward over the alligator's jowls. Once the transmitter is in place the dorsal bony scutes along one side of the back are drilled and nylon cable ties (2 mm x 100 mm) are inserted in these holes and looped but not tightened. The sensors are then placed at the positions where they will be implanted or attached and the sensor leads threaded through the nylon tie loops (Fig. 1 - inset). Each location where an implant was to be made is then thoroughly scrubbed with Phisohex soap and coated liberally with Pharmadine solution. An injection of 2% Xylocaine is then administered at the site where a sensor is to be implanted, and a 3-4 mm incision is made through which the sensor is inserted and then sutured into position. Once all the sensors are implanted and there is sufficient slack in the leads between scutes to allow for movement without breakage, the nylon ties are tightened. The miniature coaxial leads are then soldered to the transmitter leads and sealed with fibered dental acrylic. With the operation completed the alligator is transported to the initial site of capture and released. The REMS is then towed to the same vicinity to monitor the microenvironment to which the alligator is being exposed during those periods when temperature data is being transmitted from the animal. The alligator is tracked continuously for the next three days and intermittently for the following two to three weeks. When monitoring the alligator, data is collected at a minimum on the hour and half-hour to correspond with the REMS data which is printed at those times.

CONCLUSIONS

This eight-channel biotelemetry system has worked successfully for monitoring the thermoregulatory behavior of large, free ranging alligators inhabiting a thermally-enriched aquatic system. Because water is of prime importance to an alligator's thermoregulatory efforts (Spotila, 1974), this telemetry system in conjunction with the automated micro-climate monitoring station provides a means of directly obtaining vital information on the mechanisms used by these animals to survive in a thermally altered environment. Studying in detail the response of these large poikilothermic reptiles to environmental stress should also help to clarify the basic temperature relationships of other vertebrates whose survival similarly depends on their ability to maintain a proper body temperature by utilizing external heat sources.

ACKNOWLEDGEMENTS

I wish to thank Stephen Smith for his important role in helping to develop the telemetry system. Michael Vargo also offered many valuable suggestions throughout the study and assisted in designing and carrying-out surgical procedures. I. L. Brisbin, Jr. provided helpful comments on the paper. Illustrations were drawn by Jean Coleman. This research and the preparation of this paper were supported by contract (EY-76-C-09-0819) between the United States Energy Research and Development Administration and the University of Georgia.

LITERATURE CITED

Bakker, R. T. 1972. Anatomical and ecological evidence of endothermy in dinosaurs. Nature 238:81-85.

Desmond, Adrian J. 1976. The hot-blooded dinosaurs. The Dial Press/James Wade, New York. 238 p.

Esch, G. W. and R. W. McFarlane (eds.). 1976. Thermal Ecology II. ERDA Symposium Series, (CONF 750425), 404 p.

Gibbons, J. W. and R. R. Sharitz (eds.). 1974. Thermal Ecology. AEC Symposium Series, (CONF 730505), 679 p.

Lang, J. W. 1975. Thermoregulatory behavior in adult American alligators. Amer. Zool. 15:797. (abstract).

Murphy, Thomas M. and I. Lehr Brisbin, Jr. 1974. Seasonal movements of the American alligator (Alligator mississippiensis) in a reservoir receiving thermal effluent. In Thermal Ecology, J. W. Gibbons and R. R. Sharitz (eds.), AEC Symposium Series, (CONF 730505), p. 313-321.

Murphy, Thomas M. and T. T. Fendley. 1975. A new technique for live trapping of nuisance alligators. Proc. 27th Conf. SE Assoc. Game and Fish Comm. p. 308-311.

Smith, Norbert E. 1975. Thermoregulation of the American alligator. Physiol. Zoo. 48:177-194.

Spotila, James R. 1974. Behavioral thermoregulation of the American alligator. In Thermal Ecology, J. W. Gibbons and R. R. Sharitz (eds.), AEC Symposium Series, (Conf 730505), p. 322-334.

Spotila, James R., Oscar H. Soule and David M. Gates. 1972. The biophysical ecology of the alligator, energy budgets and climate spaces. Ecology 53(6):1094-1102.

Spotila, James R., Paul W. Lommen, George S. Bakken and David M. Gates. 1973. A mathematical model for body temperatures of large reptiles: implications for dinosaur ecology. Amer. Natur. 107:391-404.

IN: Proceedings 1st International Conference on Wildlife Biotelemetry F. M. Lond (ed.). International Conference on Wildlife Biotelemetry, Laramie, Wyoming. p. 70-78. 1977.